Graphic Era HILL UNIVERSITY

Established by an Act of the State Legislature of Uttarakhand (Adhiniyam Sankhya 12 of 2011)
University under section 2(f) of UGC Act, 1956

End Term (Odd) Semester Examination December 2024

Roll no.....

Name of the Course and semester: B.Tech ME III
Name of the Paper: Engineering Mechanics
Paper Code: TME-306

Time: 3 Hour

Maximum Marks: 100

Note:

(i) All the questions are compulsory.
(ii) Answer any two sub questions from a, b and c in each main question.
(iii) Total marks for each question is 20 (twenty).
(iv) Each sub-question carries 10 marks.

Q1. (2X10=20 Marks)

a. Find reactions at all the contact points if weight of P is 200 N & diameter is 100 mm, whereas weight of Q is 500 N and diameter is 180 mm. CO 1, 2

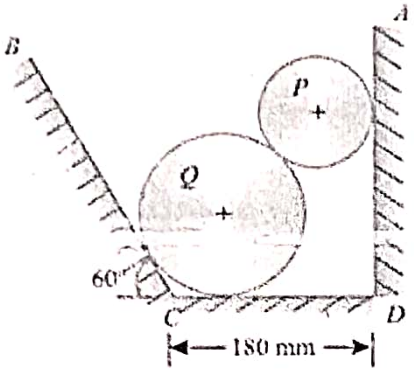

b. Explain Principle of superposition of forces and Principle of transmissibility of forces. CO 1,2

c. Find the reaction force at point A and B as mention in the question. CO 1, 2

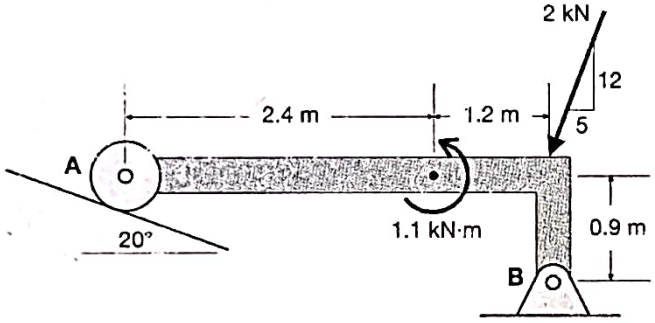

Q2. (2X10=20 Marks)

a. A bar of AB 12 m long rests in horizontal position on two smooth planes as shown in the figure. Find the distance X at which 100 kN is to be placed to keep the bar in equilibrium. CO 1,2,3

End Term (Odd) Semester Examination December 2024

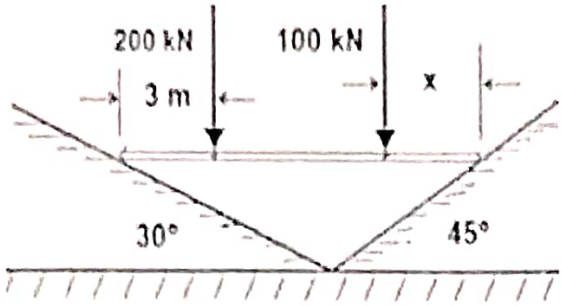

b. Find the resultant force magnitude and orientation (clockwise from the positive x-axis). CO 2

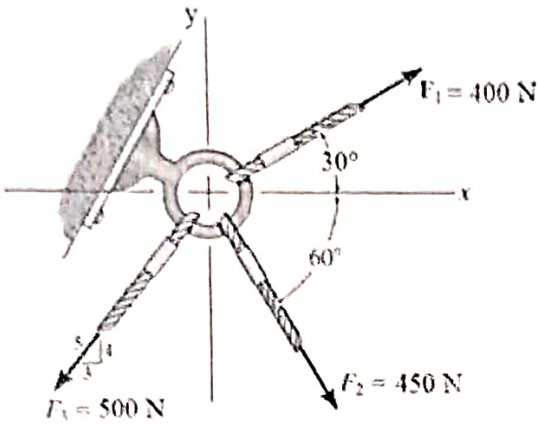

c. Find the tension in string AB and AC. CO 2, 3

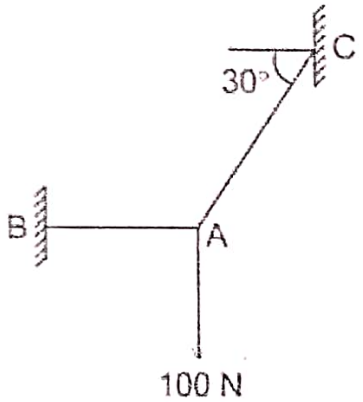

Q3. (2X10=20 Marks)

a. Find the Area Moment of inertia for triangle using the method of integration. CO 2, 3

b. Determine the centroid of given figure CO 2, 3

End Term (Odd) Semester Examination December 2024

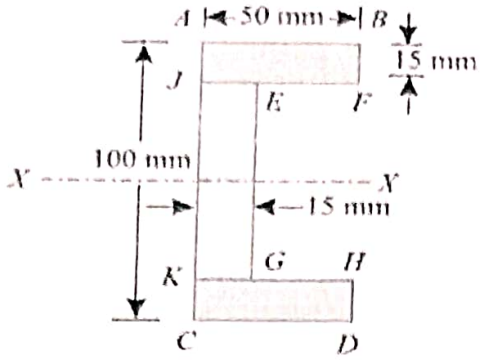

c. Determine the moment of inertia of the composite area about the x axis. Set a = 440 mm, b = 190 mm, h = 110 mm and r = 95 mm. CO 2, 3

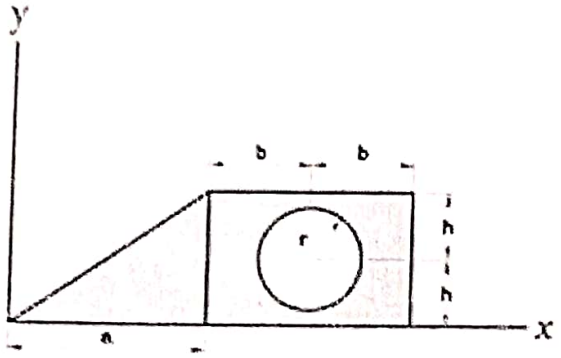

Q4. (2X10=20 Marks)

a. A truss has been loaded as shown in the figure. Find the forces in any two member and tabulate them by any methods. CO 3

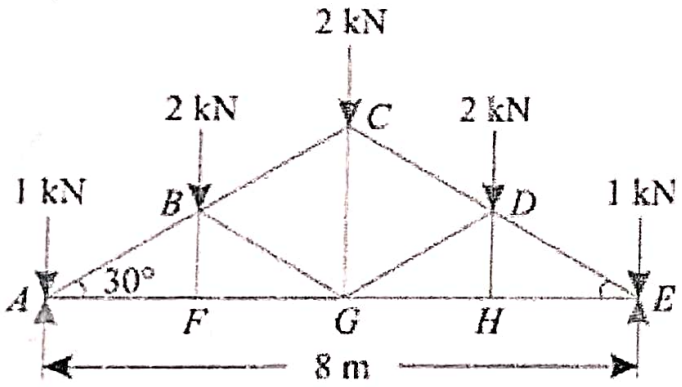

b. Determine the force P to start movement of wedge if the angle of friction is 15 degree. CO 3

End Term (Odd) Semester Examination December 2024

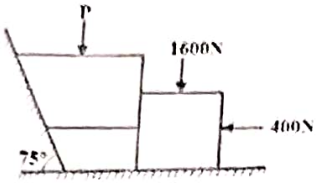

c. A block rests on a rough inclined plane making an angle of 30° with the horizontal. The coefficient of static friction between the block and the plane is 0.8. If the frictional force on the block is 10 N, the mass of the block (in kg) is(taken g =10 m/s²). CO 3,4

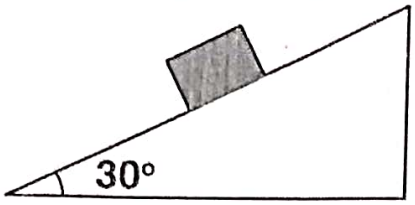

Q5. (2X10=20 Marks)

a A block of mass 0.1 kg is held against a wall applying a horizontal force of 5N on the block. If the coefficient of friction between the block and the wall is 0.5, the magnitude of the frictional force acting on the block is? CO 3,4

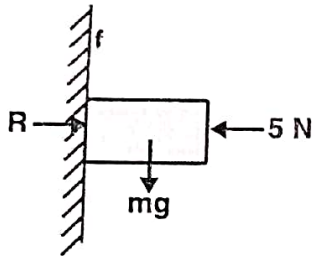

b. A uniform ladder of length 3.25m and weighing 250N is placed against smooth verticl wall with its lower end 1.25m from the wall. If coefficient of friction is 0.3 . Find the friction force between ladder and floor. CO 4, 5

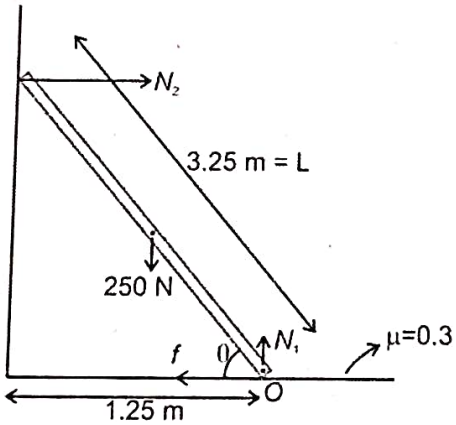

c. Explain Mechanical advantage, velocity ratio, efficiency and find out the relation between them. CO 4, 5